Spindle ball bearing HY KH 6003 C TA P4+

24.11.2026



Components

Bearing designation:	HY KH 6003 C TA
Bearing design:	KH
Series / size:	6003
Ball material:	Ceramic
Cage:	TA
Seal:	2RZ optional (with grease)
Precision:	P4+
Main dimensions [d x D x B]:	17 x 35 x 10 mm

Load data

Static load capacity	C_{0r}:	1690 N
Dynamic load capacity	C_r:	3750 N
Fatigue load limit	C_U:	64 N
Speed limit	n_{grease}:	78750 1/min
Speed limit	n_{oil}:	105000 1/min
Light preload	L:	19 N
Axial rigidity	C_{ax}:	22 N/µm
Medium preload	M:	55 N
Axial rigidity	C_{ax}:	34 N/µm
Heavy preload	S:	110 N
Axial rigidity	C_{ax}:	45 N/µm
Spring preload	Ff:	80 N (for n_{max})

Geometrical Data

Bore diameter	d:	17 mm
Outer diameter	D:	35 mm
Width of single bearing	B:	10 mm
Ball diameter	D_w:	3.969 mm
Number of balls	Z:	15
Chamfer (min)	$r_{1,2\ min}$:	0.3 mm
Chamfer (min), open side	$r_{3,4\ min}$:	0.3 mm
Outer diameter of inner ring	d_1:	22.7 mm
Outer diameter of inner ring (open side)	d_2:	22 mm
Oiling nozzle position	d_T:	24.2 mm
Pitch circle diameter	d_m:	25.6 mm
Inner diameter of outer ring	D_1:	28.4 mm
Undercut of associated component	$r_{a\ max}$:	0.3 mm
Undercut of associated component (open side)	$r_{b\ max}$:	0.3 mm
Abutment diameter inner ring	$d_{a,b\ min}$:	19.2 mm
Abutment diameter outer ring	$D_{a,b\ max}$:	33.4 mm
Inner diameter of outer ring (open side)	D_2:	29.6 mm
Bearing weight	m:	0.037 kg
Contact angle	Alpha 0:	17°

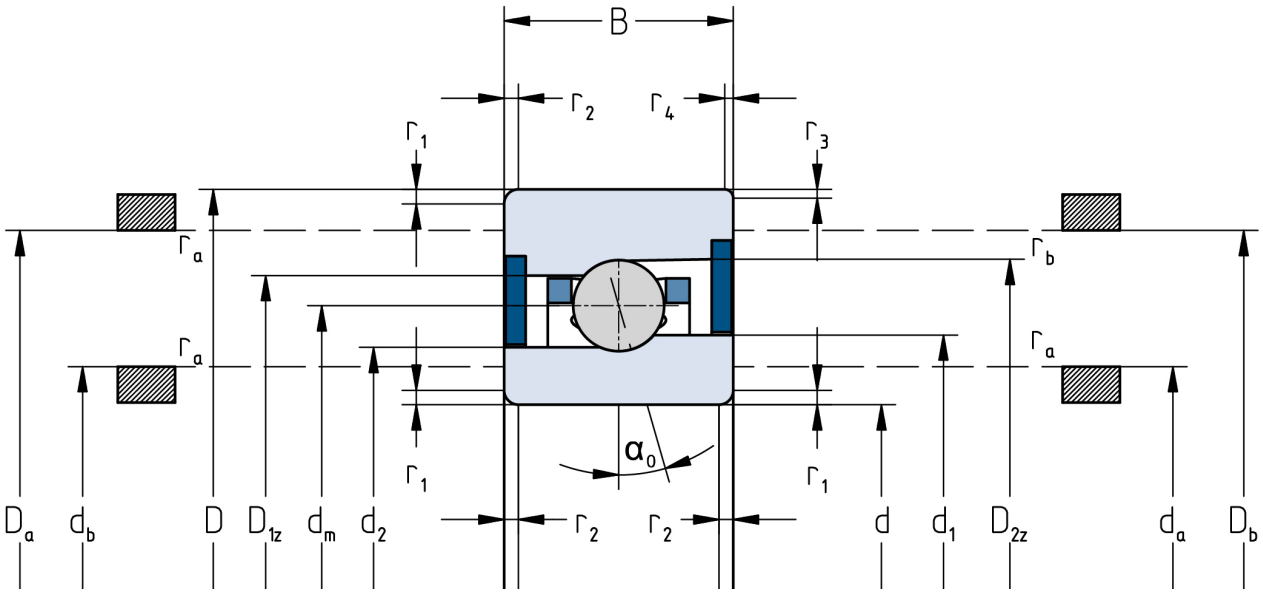

The given speed limits apply to individual bearings with spring preload. Correction factors must be considered for all properties which deviate from this.