Spindle ball bearing HY KH 6002 C TA P4+

24.11.2026



Components

Bearing designation:	HY KH 6002 C TA
Bearing design:	KH
Series / size:	6002
Ball material:	Ceramic
Cage:	TA
Seal:	2RZ optional (with grease)
Precision:	P4+
Main dimensions [d x D x B]:	15 x 32 x 9 mm

Load data

Static load capacity	C_{0r}:	1420 N
Dynamic load capacity	C_r:	3400 N
Fatigue load limit	C_U:	54 N
Speed limit	n_{grease}:	86250 1/min
Speed limit	n_{oil}:	115000 1/min
Light preload	L:	17 N
Axial rigidity	C_{ax}:	20 N/µm
Medium preload	M:	50 N
Axial rigidity	C_{ax}:	30 N/µm
Heavy preload	S:	100 N
Axial rigidity	C_{ax}:	40 N/µm
Spring preload	Ff:	65 N (for n_{max})

Geometrical Data

Bore diameter	d:	15 mm
Outer diameter	D:	32 mm
Width of single bearing	B:	9 mm
Ball diameter	D_w:	3.969 mm
Number of balls	Z:	13
Chamfer (min)	$r_{1,2\ min}$:	0.3 mm
Chamfer (min), open side	$r_{3,4\ min}$:	0.3 mm
Outer diameter of inner ring	d_1:	20.2 mm
Outer diameter of inner ring (open side)	d_2:	19.4 mm
Oiling nozzle position	d_T:	21.6 mm
Pitch circle diameter	d_m:	22.9 mm
Inner diameter of outer ring	D_1:	25.7 mm
Undercut of associated component	$r_{a\ max}$:	0.3 mm
Undercut of associated component (open side)	$r_{b\ max}$:	0.3 mm
Abutment diameter inner ring	$d_{a,b\ min}$:	17.1 mm
Abutment diameter outer ring	$D_{a,b\ max}$:	30.4 mm
Inner diameter of outer ring (open side)	D_2:	27 mm
Bearing weight	m:	0.028 kg
Contact angle	Alpha 0:	17°

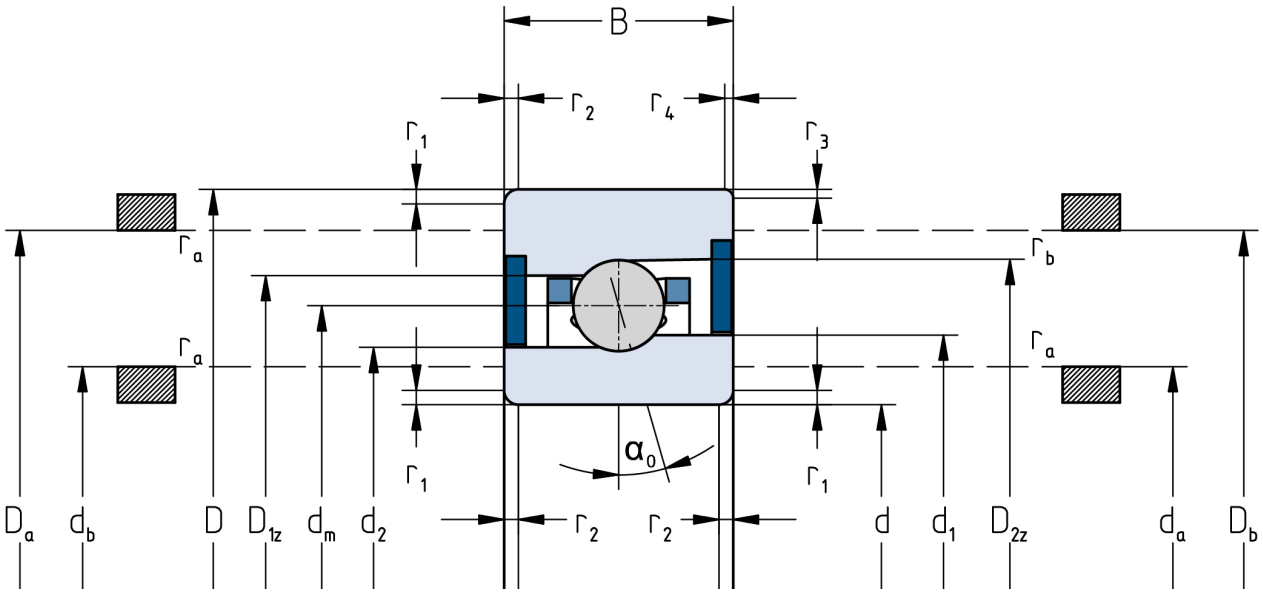

The given speed limits apply to individual bearings with spring preload. Correction factors must be considered for all properties which deviate from this.