Labyrinth plastic seal
Type S

S 25 X 47 X 10

Item number 301523

Technical data

Material:	High-quality polyoxymethylene (POM)
Inner diameter ID:	25 mm
Outer diameter OD:	47 mm
Installed width W:	10 mm
Sealing gap:	Conical
Axial play S_{ax}*:	0.8 mm
Gap diameter e_1:	31 mm
Gap diameter e_2:	41 mm
Speed limit:	40500 rpm
Weight:	0.0138 kg
Operating temperature t:	-40° - 60°C

*Entire movability from one end position to the other

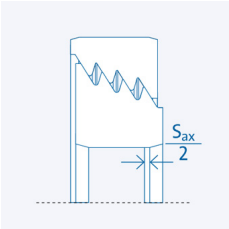

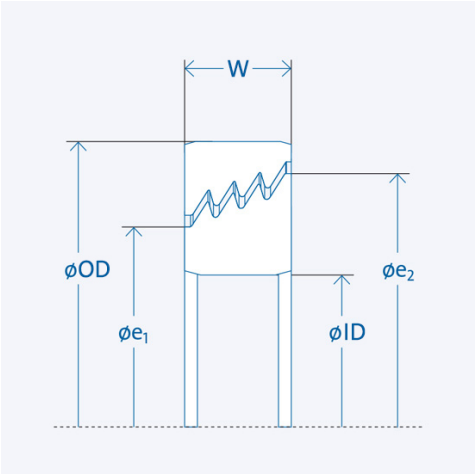

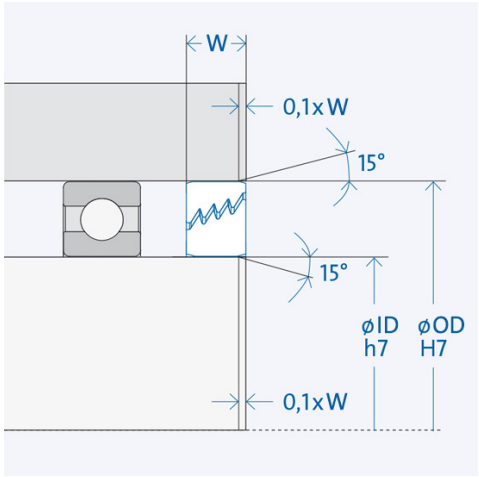

The larger gap diameter e_2 must always face the impact.

Installation

“l” Length (chamfering of shaft and housing) depending on the width W: l = 0,1 x W

Component tolerances

Surrounding structure (mating parts)

Housing: H7 / Shaft: h7
Surface quality: Rz ≤ 16 µm; Ra ≤ 3,2 µm